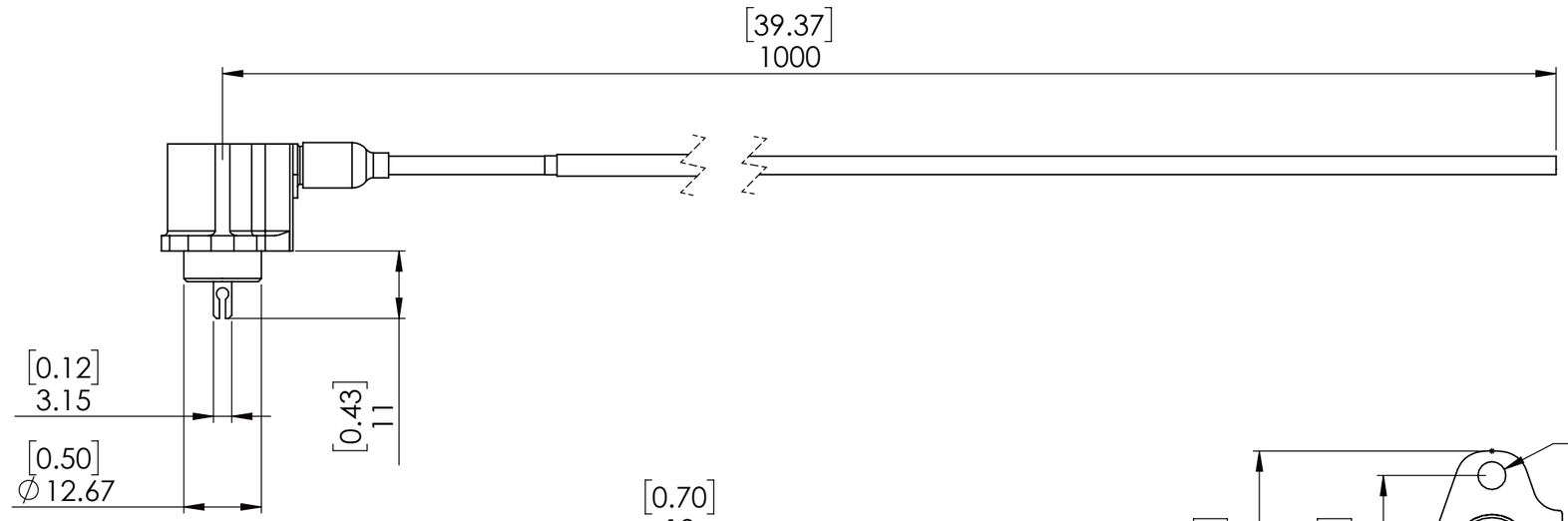

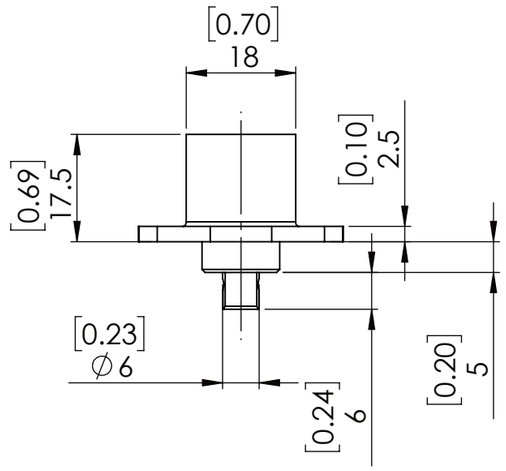

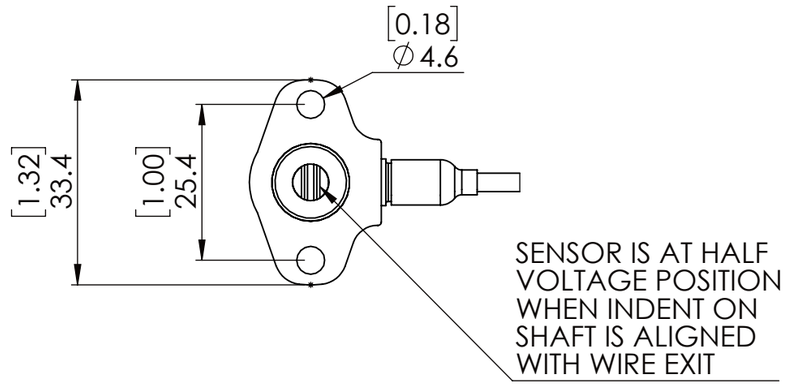

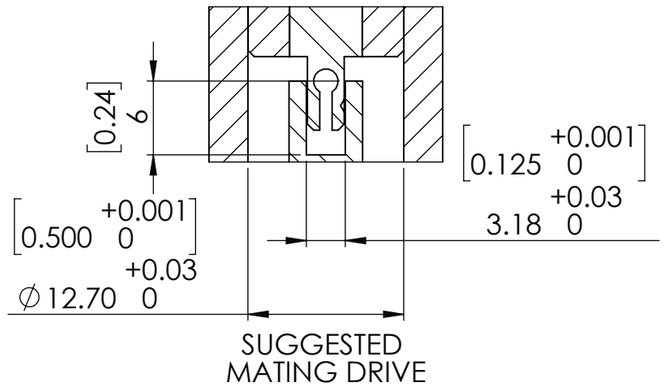

PN	DESCRIPTION
F02U.V0U.400-01	SINGLE OUTPUT, 360° RANGE
F02U.V0U.401-01	DUAL OUTPUT, 100° RANGE, CROSSING SIGNALS (THROTTLE)
F02U.V0U.402-01	DUAL OUTPUT, 40° RANGE, 50% SIGNAL (PEDAL)
F02U.V0U.403-01	DUAL OUTPUT, 100° RANGE, 50% SIGNAL (PEDAL)

SENSOR WIRE ASSIGNMENT

AWG	COLOR	DESCRIPTION
26	RED	SUPPLY 1
26	BLU	GND 1
26	WHT	OUTPUT 1
26	ORG	SUPPLY 2
26	GRN	GND 2
26	YEL	OUTPUT 2

ALL DRAWINGS IN ACCORDANCE WITH ASME Y14.5-2009
ALL DIMENSIONS IN MILLIMETERS [INCHES]
REMOVE ALL BURRS
FINISH ALL OVER
TOLERANCES UNLESS OTHERWISE SPECIFIED:
X = +/- 0.25 [0.010]
X.X = +/- 0.25 [0.010]
X.XX = +/- 0.13 [0.005]

Ind.	Change	YYYYMMDD	Drawn	Checked	Release	BWN	Resp. dept.	Add info.
01	Initial	20191018	MeJ			MSD	BEG/MSD-ENA	

Treatment | Missed Details | Size
Material: VARIOUS | From
Lang.: ENG | Weight | Crit. P. | Scale: 1:1 | Mat. meets | Syst.: SW | MNR
BOSCH
Part Name | Sheet: 1 / 1
Doc.Type: AGZ | F02U.V0U.400-01 | DP/TD: 000 | Vers.: 01 | Format: A3
Repl. for | Repl. by

© Robert Bosch LLC [2008]. All rights reserved, also regarding any disposal, exploitation, reproduction, editing, distribution, as well as in the event of applications for industrial property rights.